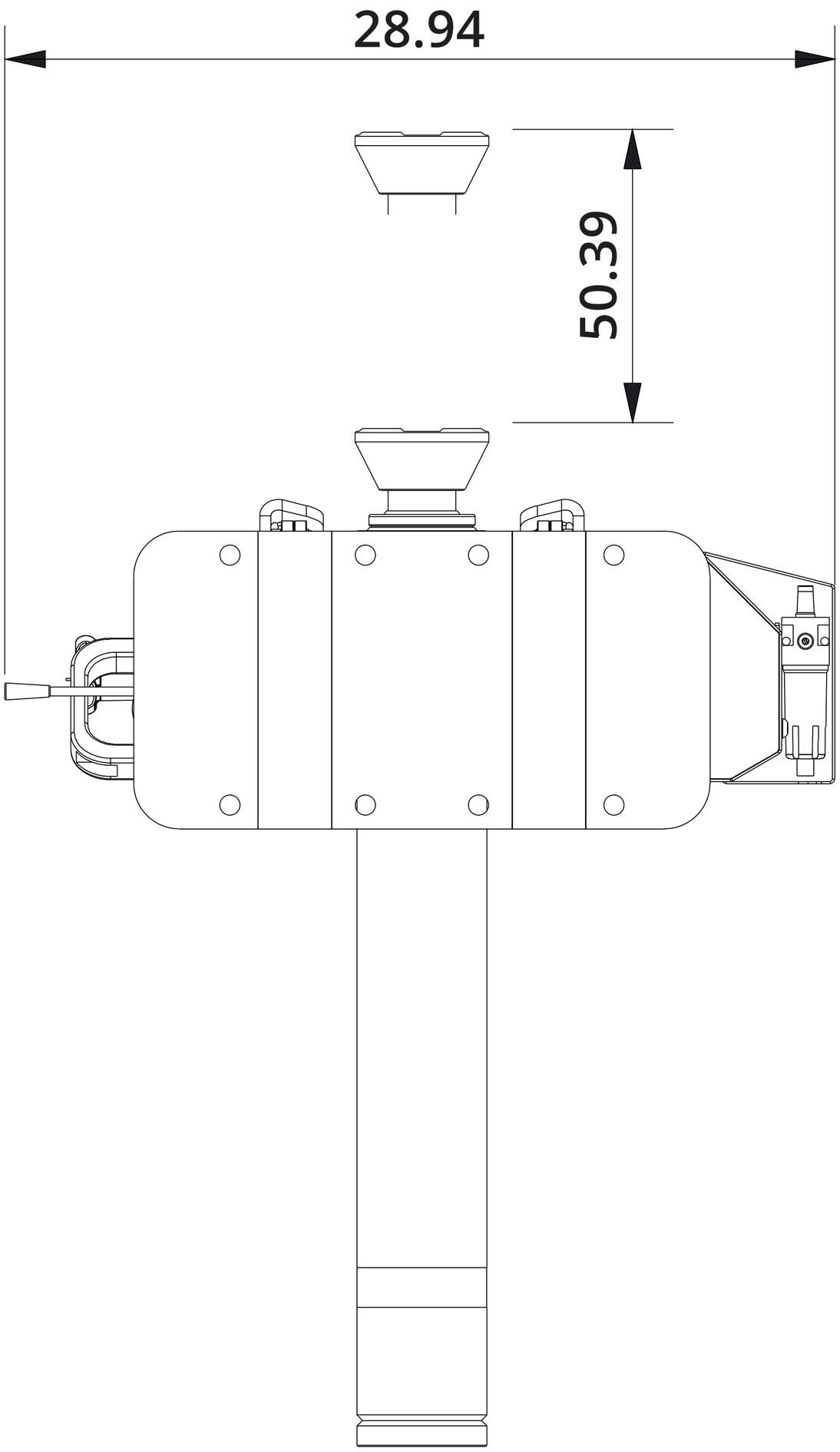
28.94
50.39

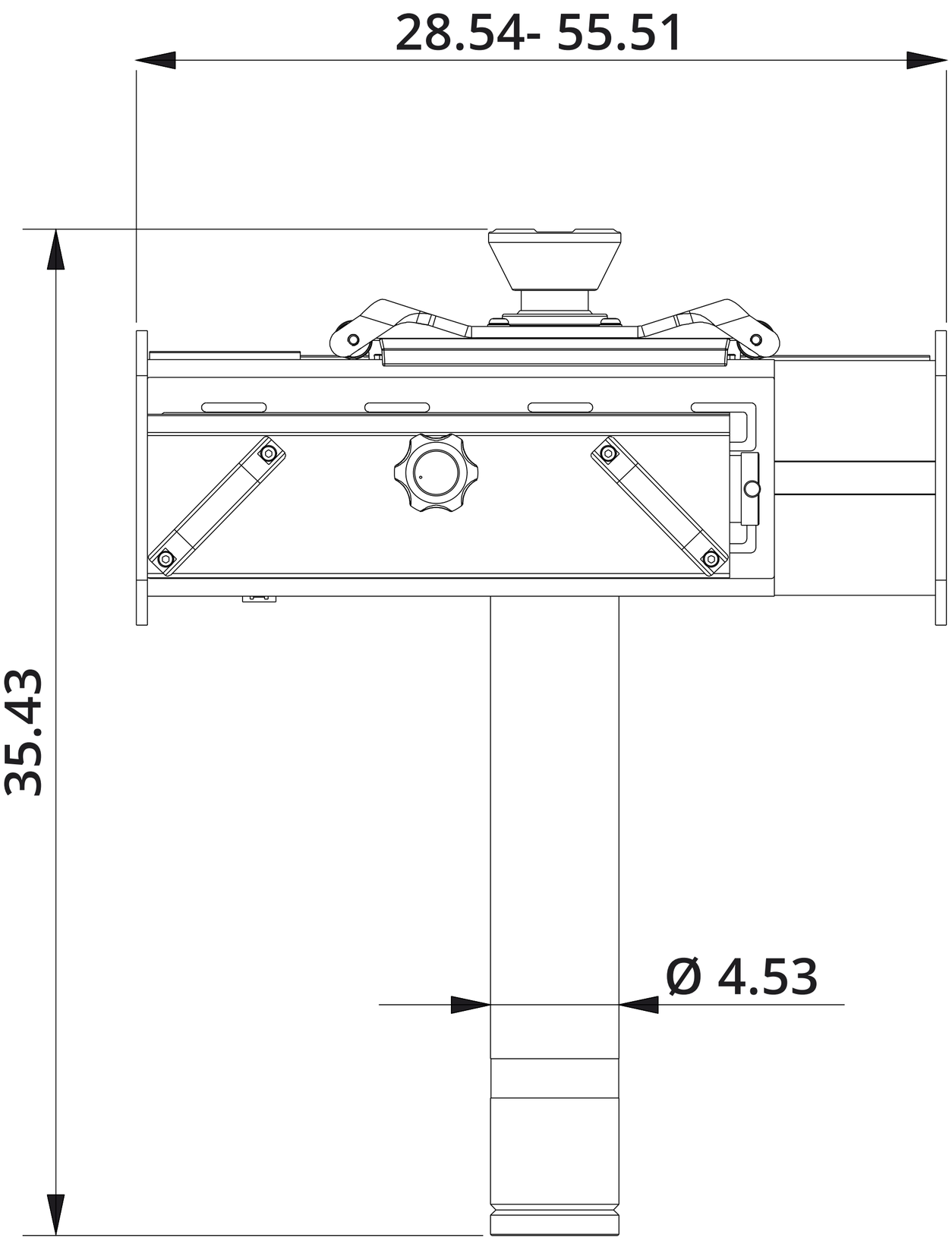
28.54- 55.51
35.43
Ø 4.53